Surge protectors for LED lighting system Class 2

MLP2-230L-P/DL



- Type 2 or 3 surge protector for 2-phase (Power/Control)
- For LED lighting system
- Class II configuration
- IP65 version
- Very compact dimensions
- Max. discharge current 10kA
- EN 61643-11, IEC 61643-11 compliance

CE

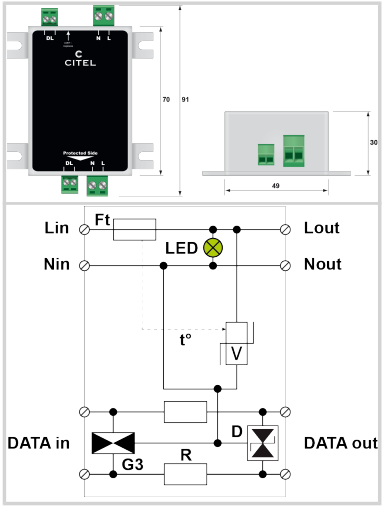

Electrical Characteristics		
SPD type	IEC	2+3
AC system		TT-TN
Nominal line voltage	Un	230-277 Vac
Max. AC operating voltage	Uc	305 Vac
Max. frequency	f max.	10 MHz
Max. load current @25°C	IL	2.5 A
Temporary Over Voltage (TOV) Characteristics - 5 sec. *Without disconnection*	UT	335 Vac withstand
Temporary Over Voltage (TOV) Characteristics - 120 mn *Without disconnection or with safety disconnection*	UT	440 Vac disconnection
Residual Current *Leakage current to Ground*	Ipe	None
Follow current	If	None
Nominal discharge current *15 x 8/20 µs impulses*	In	5 kA
Max. discharge current *max. withstand @ 8/20 µs by pole*	Imax	10 kA
Total Maximum discharge current *max. total withstand @ 8/20 µs*	Imax Total	20 kA
Withstand on Combination waveform IEC 61643-11 *Class III test: 1.2/50µs - 8/20µs*	Uoc	10 kV / 5 kA
Withstand on overvoltages IEEE C62.41.1		10 kV / 10 kA
Protection mode(s)		Common/Differential mode
Protection level L/N *@ In (8/20µs)*	Up L/N	1.5 kV
Protection level L/PE *@ In (8/20µs)*	Up L/PE	1.5 kV
Admissible short-circuit current	Isccr	10 000 A
Mechanical Characteristics		
Mounting		Wall or plate
Housing material		Thermoplastic UL94 V-0
Operating temperature	Tu	-40/+85°C
Dimensions		See diagram
Disconnectors		
Thermal disconnector		Internal
Installation ground fault breaker		Type 'S' or delayed
Standards		
Standards compliance		IEC 61643-11 / EN 61643-11 / UL1449 ed.5
Part number		
721232		