MSP-VM230-2P



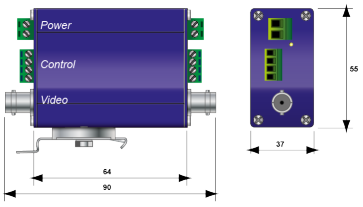

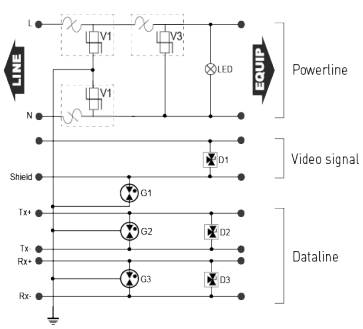

G: Gas discharge tube
V: Varistor
D: Clamping diode network
LED: Indicator

Electrical Characteristics		
Network		230/400V
AC system		TT-TN
Max. DC operating voltage	Uc	255 Vdc
Max. frequency	f max.	16 MHz
Insertion loss		< 0.1 dB
Max. load current @25°C	IL	5 A
Max. load current @25°C	IL	300 mA
Nominal discharge current *15 x 8/20 µs impulses*	In	5 kA
Max. discharge current *max. withstand @ 8/20 µs by pole*	Imax	10 kA
Withstand on Combination waveform IEC 61643-11 *Class III test: 1.2/50µs - 8/20µs*	Uoc	10 kV / 5 kA
Protection mode(s)		Common/Differential mode
Protection level *@ In (8/20µs)*	Up	1.2 kV
Protection Level *C3 (10/1000µs), 300 applications@10 A, Y-Y (Line/Line)*	Up	20 V
Protection Level *C3 (10/1000µs), 300 applications@10 A, Y-C (Line/Earth)*	Up	20 V
ELEC		
Network		Signal video
ELEC		
Max. DC operating voltage	Uc	6 Vdc
ELEC		
Max. frequency	f max.	100 Mhz
ELEC		
Insertion loss		< 1dB
ELEC		
Protection level *@ In (8/20µs)*	Up	20 V
ELEC		
Network		2 pairs signal 0-5 V
ELEC		
Max. DC operating voltage	Uc	8 Vdc
ELEC		
Max. frequency	f max.	16 Mhz
ELEC		
Insertion loss		< 1dB
ELEC		
Nominal discharge current *15 x 8/20 µs impulses*	In	2.5 kA
ELEC		
Max. discharge current *max. withstand @ 8/20 µs by pole*	Imax	5 kA
ELEC		
Protection level *@ In (8/20µs)*	Up	20 V
Mechanical Characteristics		
Technology		MOV+GDT
Connection to Network		By screw terminals: 2.5mm² max.
Format		DIN rail or flange
Mounting		DIN rail or plate (flange)
Housing material		Anodized aluminum
Operating temperature	Tu	-40/+85°C
Protection rating		IP20
Failsafe mode		Green LED OFF and line cut-off
Disconnection indicator		LED green OFF and AC network cut-off
Dimensions		See diagram
Standards		
Standards compliance		IEC 61643-21 / EN 61643-21 / UL1449 ed.5
Part number		
420431		