Screw terminal for 'V' connection

KN T 1316I

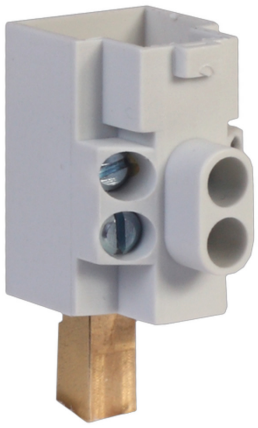

- 'V' connection screw terminal for SPD
- Improved connection for better efficiency
- 2 x 25 mm² wire connection
- Adapted to DAC/DDC surge protectors

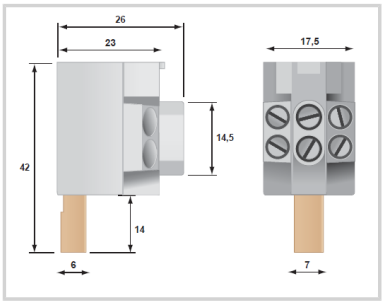

Electrical Characteristics		
Max. load current @25°C	IL	32 A
Max. Load current	IL	1000 Vac / 100 A
Mechanical Characteristics		
Mounting		On DS range terminal
Housing material		Polycarbonate UL94 V-0
Dimensions		See diagram
Contacts		Brass
Mini-max. cross section		2.5 - 35 mm² (13-2 AWG)
Part number		
151000		