AC surge protector for LED Lighting system Class 1

MLP1-230L-P/DL



- Combined surge protector AC and DALI transmission
- Type 2 or 3
- For LED lighting system Class I
- Max. discharge current 10kA
- EN 61643-11, IEC 61643-11 compliance

CE

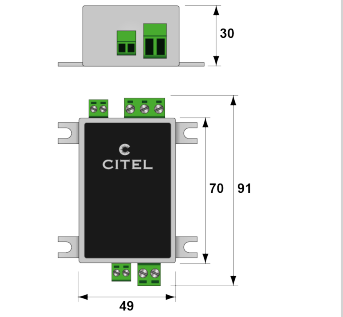

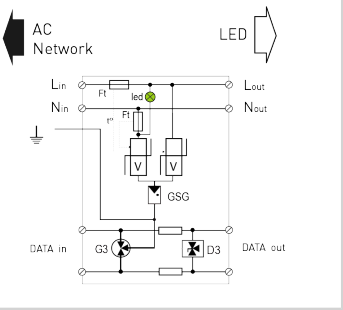

Electrical Characteristics		
SPD type	IEC	2+3
Network		AC: 220-240 V single-phase I Dataline: DALI/DMX/RS485/0-10V
AC system		TT-TN
Nominal line voltage	Un	AC : 230-277 Vac I DATA : 24 Vac
Max. AC operating voltage	Uc	AC : 305 Vac I DATA : 28 Vac
Max. frequency	f max.	DATA : 10 MHz
Temporary Over Voltage (TOV) Characteristics - 5 sec. *Without disconnection*	UT	335 Vac withstand
Temporary Over Voltage (TOV) Characteristics - 120 mn *Without disconnection or with safety disconnection*	UT	440 Vac disconnection
Residual Current *Leakage current to Ground*	Ipe	None
Follow current	If	None
Max. discharge current *max. withstand @ 8/20 µs by pole*	Imax	AC : 10 kA I DATA : 10 kA
Total Maximum discharge current *max. total withstand @ 8/20 µs*	Imax Total	AC : 20 kA I DATA : 20 kA
Withstand on Combination waveform IEC 61643-11 *Class III test: 1.2/50µs - 8/20µs*	Uoc	AC : 10 kV / 5 kA
Withstand on overvoltages IEEE C62.41.1		10 kV / 10 kA
Protection mode(s)		Common/Differential mode
Protection level *@ In (8/20µs)*	Up	DATA : 50 V
Protection level L/N *@ In (8/20µs)*	Up L/N	1.5 kV
Protection level L/PE *@ In (8/20µs)*	Up L/PE	1.5 kV
Admissible short-circuit current	Isccr	10 000 A
ELEC		
Insertion loss		DATA : < 1dB
ELEC		
Max. load current @25°C	IL	AC : 2.5 A I DATA : 300mA
ELEC		
Nominal discharge current *15 x 8/20 µs impulses*	In	AC : 5kA I DATA : 5 kA
Mechanical Characteristics		
Technology		MOV+GDT
Connection to Network		AC: Screw terminal - 1.5mm² max. DATA: Screw terminal - 1mm² max.
Mounting		On plate
Housing material		Thermoplastic UL94 V-0
Operating temperature	Tu	-40/+85°C
Protection rating		IP20
Failsafe mode		Disconnection and AC line cut-off
Disconnection indicator		LED green OFF and AC network cut-off
Operating indicator		Green Led ON
Remote signaling of disconnection		No
Dimensions		See diagram
Disconnectors		
Thermal disconnector		Internal
Installation ground fault breaker		Type 'S' or delayed
Standards		
Standards compliance		IEC 61643-11 / EN 61643-11 / UL1449 ed.5
Certification		
Part number		
721231		