Surge protector for LED lighting system Class 1

DSLP1-230L

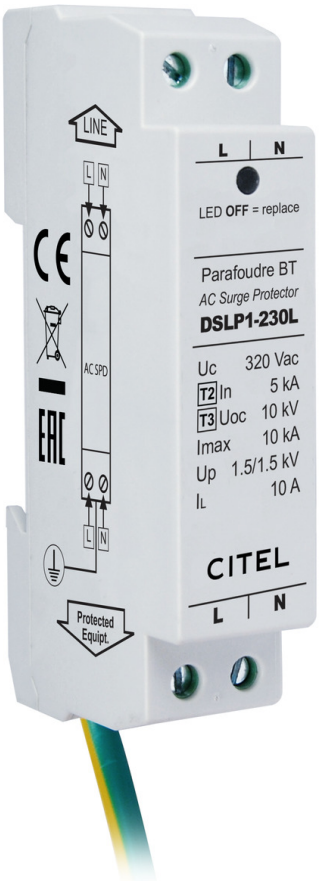

- Type 2 (or 3) surge protectors for LED
- Very compact (low profile)
- DIN rail mounting
- Screw terminal connection
- Status indicator
- Disconnection AC end of life
- EN 61643-11, IEC 61643-11 certified

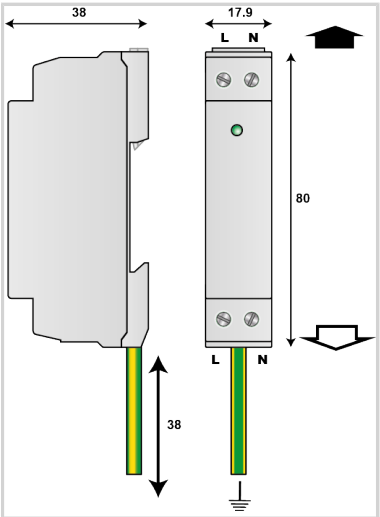

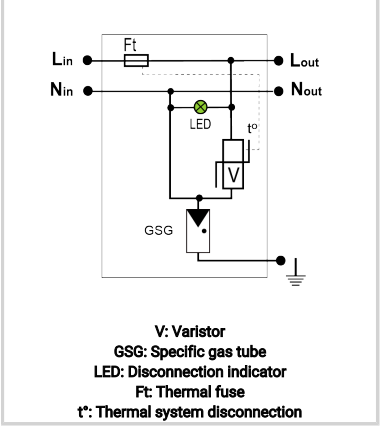

V: Varistor
GSG: Specific gas tube
LED: Disconnection indicator
Ft: Thermal fuse
t°: Thermal system disconnection

Electrical Characteristics		
SPD type	IEC	2+3
Network		220-240 V Single-phase
AC system		TT-TN
Nominal line voltage	Un	230-277 Vac
Max. AC operating voltage	Uc	320 Vac
Max. load current @25°C	IL	10 A
Temporary Over Voltage (TOV) Characteristics - 5 sec. *Without disconnection*	UT	335 Vac withstand
Temporary Over Voltage (TOV) Characteristics - 120 mn *Without disconnection or with safety disconnection*	UT	440 Vac disconnection
Temporary Over Voltage N/PE (TOV HT) *Without disconnection or with safety disconnection*	UT	1200 V/300A/200 ms disconnection
Residual Current *Leakage current to Ground*	Ipe	None
Nominal discharge current *15 x 8/20 µs impulses*	In	5 kA
Max. discharge current *max. withstand @ 8/20 µs by pole*	Imax	10 kA
Withstand on Combination waveform IEC 61643-11 *Class III test: 1.2/50µs - 8/20µs*	Uoc	10 kV / 5 kA
Withstand on overvoltages IEEE C62.41.1		10 kV / 10 kA
Protection mode(s)		Common/Differential mode
Protection level L/N *@ In (8/20µs)*	Up L/N	1.5 kV
Protection level L/PE *@ In (8/20µs)*	Up L/PE	1.5 kV
Admissible short-circuit current	Isccr	10 000 A
Mechanical Characteristics		
Technology		MOV+GDT
Connection to Network		Screw terminal 2.5 mm² max. Earthing conductor 2 mm² - length 60 cm
Mounting		Symmetrical rail 35 mm (EN 60715)
Housing material		Thermoplastic UL94 V-0
Operating temperature	Tu	-40/+85°C
Protection rating		IP20
Failsafe mode		Disconnection from AC network
Disconnection indicator		LED green OFF and AC network cut-off
Operating indicator		Green Led ON
Dimensions		See diagram

DSLP1-230L

Disconnectors		
Thermal disconnector		Internal
Installation ground fault breaker		Type 'S' or delayed
Standards		
Standards compliance		EN 61643-11 / IEC 61643-11
Certification		CB
Part number		
352913		