Compact Type 2+3 hard wired surge protector

MSB10V-400 DE



- Compact type 2 + 3 surge protector
- Wall mounting and hard wired connection
- Status indicators
- IP66
- EN 61643-11 and IEC 61643-11, UL1449 ed.5 compliance

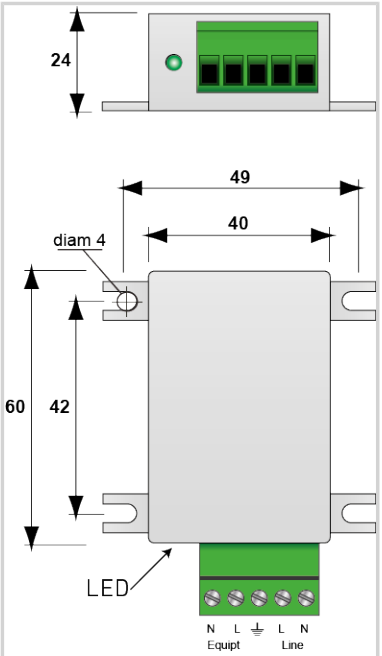

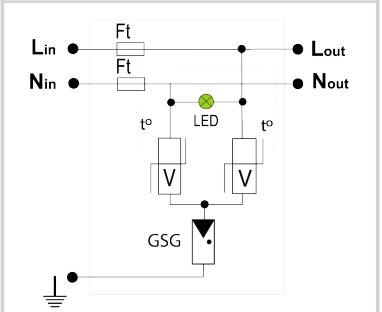

V: Varistor
GSG: Specific gas tube
LED: Disconnection indicator
Ft: Thermal fuse
t°: Thermal system disconnection

Electrical Characteristics		
SPD type	IEC	2+3
Network		230/400V
AC system		TT-TN
Nominal line voltage	Un	230 V
Max. AC operating voltage	Uc	277 Vac
Max. load current @25°C	IL	16 A
Temporary Over Voltage (TOV) Characteristics - 5 sec. *Without disconnection*	UT	335 Vac withstand
Temporary Over Voltage (TOV) Characteristics - 120 mn *Without disconnection or with safety disconnection*	UT	440 Vac disconnection
Follow current	If	None
Nominal discharge current *15 x 8/20 µs impulses*	In	5 kA
Max. discharge current *max. withstand @ 8/20 µs by pole*	Imax	10 kA
Withstand on Combination waveform IEC 61643-11 *Class III test: 1.2/50µs - 8/20µs*	Uoc	10 kV
Withstand on overvoltages IEEE C62.41.1		10 kV / 10 kA
Protection mode(s)		Common/Differential mode
Protection level *@ In (8/20µs)*	Up	1.5 kV
Protection level L/N *@ In (8/20µs)*	Up L/N	1.5 kV
Protection level L/PE *@ In (8/20µs)*	Up L/PE	1.5 kV
Protection level CM/DM *@ In (8/20µs)*	Up mc /md	1.5 kV / 1.5 kV
Admissible short-circuit current	Isccr	10 000 A
Mechanical Characteristics		
Technology		MOV+GDT
Connection to Network		By screw terminal
Mounting		Wall or plate
Housing material		Thermoplastic UL94 V-0
Operating temperature	Tu	-40/+85°C
Protection rating		IP20
Failsafe mode		Disconnection and AC line cut-off
Disconnection indicator		Green LED OFF
Operating indicator		Green Led ON
Dimensions		See diagram
Disconnectors		
Thermal disconnector		Internal
Installation ground fault breaker		Type 'S' or delayed
Standards		
Standards compliance		IEC 61643-11 / EN 61643-11 / UL1449 ed.5
Certification		UL Recognized
Part number		
56110120		