10 gigabit POE ++ surge protector

CWMJ8-POE-C6A



- POE++ Compatible (IEEE 802.3bt) -10Gb (5-100m) with Cat6A S/FTP cabling
- Shielded RJ45 connectors
- Outdoor applications, IP66 (NEMA 4/4X)
- Plastic enclosure, UL94-V0
- Conforms to IEC/EN 61643-21
- SPD categories D1, C3, C2, C1
- 16kA total surge discharge capability

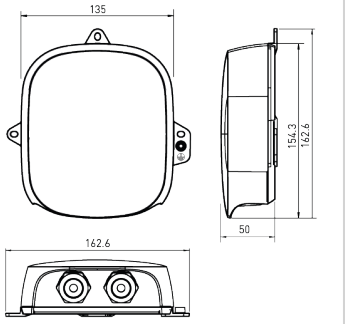

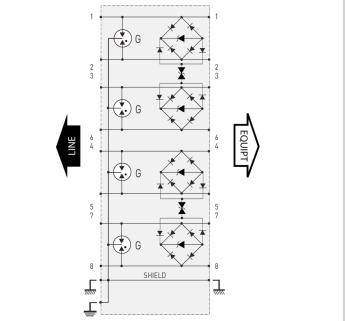

G: 3-electrode GDT
DBC: 3-pole Low capacitance diode

Electrical Characteristics		
Network		10Gb/s on Cat6A S/FTP cabling
Protection modes (network)		CM / DM
Protection modes (POE)		CM / DM (common mode / differential mode)
Transmission standard		IEEE 802.3bt
Lightning Protection Zones (LPZ)		0 - 3
Max. operating voltage (DATA)	Uc	8 Vdc
Max. operating voltage (POE)	Uc	60 Vdc
Max. frequency	f max.	500 MHz
Max. data rate		10 Gbps
Max. load current @25°C	IL	2 A
Max. POE power (4PPOE)		90 W
Nominal discharge current *C1 (1.2/50us / 8/20µs), 300 applications X-X (Line/Line)*	In	1kV / 500A
Nominal discharge current *C1 (1.2/50us / 8/20µs), 300 applications, X-C (Pair-Pair, POE)*	In	200 V / 100 A
Nominal discharge current *C2 (1.2/50us / 8/20µs), 10 applications X-C (Line/Earth)*	In	4 kV / 2 kA
Max. discharge current *max. withstand @ 8/20 µs, X-C (Line/Earth)*	Imax	2 kA
Max. discharge current *max. withstand @ 8/20 µs, 8X-C (1&2+3&6+4& 5+7&8 to Earth)*	Imax Total	16 kA
Protection Level *C3 (10/1000µs), 300 applications@10 A, Y-Y (Line/Line)*	Up	≤ 20 V
Protection Level *C3 (10/1000µs), 300 applications @ 10A, (Pair-Pair, POE)*	Up	< 100 V
Protection Level *C3 (10/1000µs), 300 applications@10 A, Y-C (Line/Earth)*	Up	< 70 V
Impulse current *D1 (10/350µs), 2 applications, X-C (Line/Earth)*	Iimp	500 A
Line resistance (± 10%)		~ 0 ohms
Capacitance *@1MHz, X-C (Line/Earth)*	C	< 5 pF
Mechanical Characteristics		
Technology		GDT+TVS diode
SPD configuration		8 wires+shielded
Connection to Network		RJ45 shielded connectors Female input/output
Cable glands		Plastic/Rubber
Format		Plastic Enclosure with connectors input/output
Mounting		Wall / Plate
Housing material		Thermoplastic UL94 V-0
Operating temperature	Tu	-40/+85°C
Ingress Protection rating		IP66 (NEMA 4/4X)
Failsafe mode		Transmission cut-off - Fault mode 2 (short-circuit)
Pinout		(1-2)(3-6)(4-5)(7-8)
Dimensions		See diagram
Standards		
Standards compliance		IEC 61643-21 / EN 61643-21 / UL497B / IEEE 802.3af/3at/3bt, ANSI/TIA-568-c.1
UL Category		QVGQ - Isolated Loop Circuit Protectors
UL File Number		E184939
Certification		UL Listed
Environmental standards		EU RoHS
Part number		
581544		