Fuses+holders 2-poles for protection of Type 1 AC SPD

SFD1-13S-20



- Specific Fuses (SPD Fusing Disconnectors) for short circuit protection of AC SPD
- For Type 1 SPD
- Surge current withstand: 12.5 kA (@10/350µs)
- Very compact
- Fuses included
- Remote signaling and status signaling

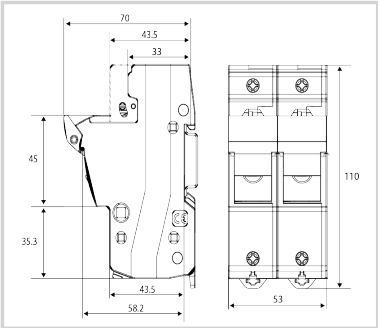

Electrical Characteristics		
AC system		IT
Max. AC operating voltage	Uc	500 Vac
Nominal discharge current *15 x 8/20 µs impulses*	In	50 kA
Max. discharge current *max. withstand @ 8/20 µs by pole*	Imax	80 kA
Impulse current by pole *max. withstand 10/350µs by pole*	Iimp	12.5 kA
Equivalent rated AC current		Equivalent 125 A (gL/gG)
Breaking capacity		100 000 A
Residual voltage	Up	< 0.4 kV @ 12.5 kA
Mechanical Characteristics		
Fuse configuration		Cylindrical 14x51 mm
Mounting		Symmetrical rail 35 mm (EN 60715)
Accessory(s) provided		Fuse(s) included
Operating temperature	Tu	-40/+85°C
Protection rating		IP20
Spare module(s)		SFD1-13
Remote signaling of disconnection		Yes
Dimensions		See diagram
Standards		
Standards compliance		EN 61643-11 /IEC 61643-11 /EN 60269-1/EN 60269-2/IEC 60269-1/IEC 60269-2
Part number		
64051		