Type 2+3 AC surge protector -2-pole - Monobloc

DACN30VGS-20-1260



- Type 2 + 3 AC surge protector
- VG Technology
- In: 15 kA
- No leakage current
- Monobloc module for each phase
- Remote signaling
- Optimized to TOV
- EN 61643-11, IEC 61643-11 and UL1449 ed.5 compliance

CE

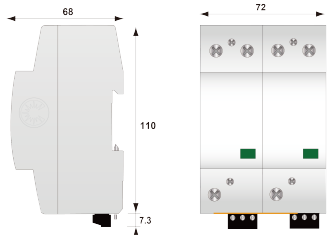

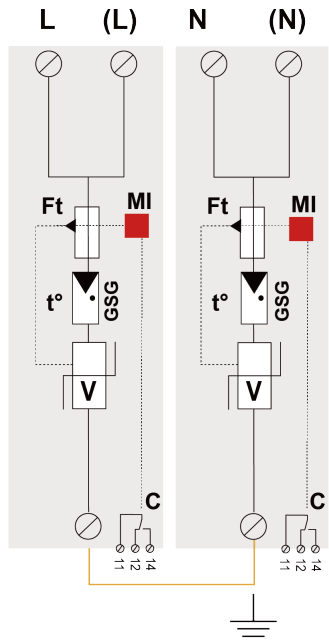

V: High-energy varistor
GSG: Specific gas tube
Ft: Thermal fuse
C: Remote signaling contact
t°: Thermal disconnection system
MI: Disconnection indicator

Electrical Characteristics		
SPD type	IEC	2+3
Nominal line voltage	Un	1140 Vac
Max. AC operating voltage	Uc	1260 Vac
Max. load current @25°C	IL	100 A
Temporary Over Voltage (TOV) Characteristics - 5 sec. *Without disconnection*	UT	1650 Vac withstand
Temporary Over Voltage (TOV) Characteristics - 120 mn *Without disconnection or with safety disconnection*	UT	2200 Vac disconnection
Residual Current *Leakage current to Ground*	Ipe	None
Follow current	If	None
Nominal discharge current *15 x 8/20 µs impulses*	In	15 kA
Max. discharge current *max. withstand @ 8/20 µs by pole*	Imax	30 kA
Withstand on Combination waveform IEC 61643-11 *Class III test: 1.2/50µs - 8/20µs*	Uoc	6 kV
Protection level *@ In (8/20µs)*	Up	4.0 kV
Protection level *@ In (8/20µs) and @ 6 kV (1,2/50 µs)*	Up	5.0 kV
Residual voltage at 5 kA *@ 5 kA (8/20µs)*	Up-5kA	3.2 kV
Admissible short-circuit current	Isccr	25 000 A
Mechanical Characteristics		
Technology		VG Technology (MOV+GSG)
SPD configuration		Single phase
Connection to Network		By screw terminals: 2.5-25mm² (35mm² rigid)
Format		Monobloc modular box
Mounting		Symmetrical rail 35 mm (EN 60715)
Housing material		Thermoplastic UL94 V-0
Operating temperature	Tu	-40/+85°C
Protection rating		IP20
Failsafe mode		Disconnection from AC network
Disconnection indicator		1 mechanical indicator - Red/Green
Remote signaling of disconnection		Output on changeover contact
Wiring for remote signaling		1.5 mm² max.
Max. Voltage/Current for remote signaling		250 V / 0.5 A (AC) / 30 V / 3 A (DC)
Dimensions		See diagram - 4TE (EN43880)
Disconnectors		
Thermal disconnector		Internal
Installation ground fault breaker		Type 'S' or delayed
Back-up protection device		Fuses type gG - 50 A
Standards		
Standards compliance		IEC 61643-11 / EN 61643-11 / UL1449 ed.5
Part number		
29422032		