Type 1+2+3 AC surge protector - 3-phase

ZPAC1-8VG-30-275



- Type 1+2+3 combined SPD based on a gas-filled spark gap
- 10-year guarantee
- Discharge capacity per pole: Iimp= 8 kA (10/350 µs)
- Operating and leakage current-free
- Individually pluggable protection modules: sustainable solution, cost-effective maintenance
- Complies with the IEC 61643-11 and EN 61643-11 standards
- VDE-AR-N 4100 compliant “Use of surge protective devices (SPD) type 1 in main power supply systems”

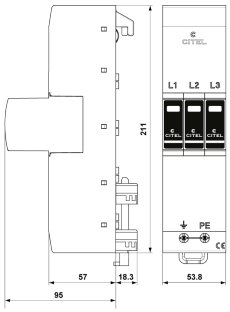

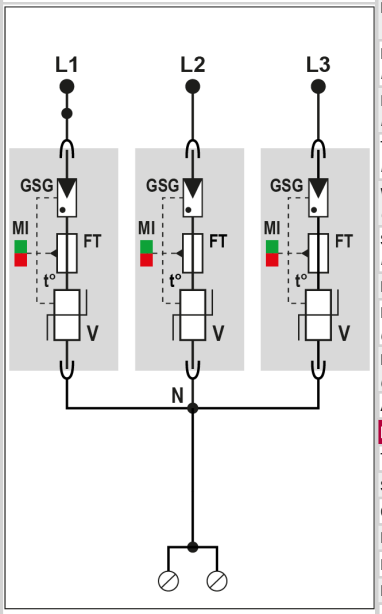

Electrical Characteristics		
SPD type	IEC	1+2+3
Network		230/400V
AC system		TNC
Nominal line voltage	Un	230/400 Vac
Max. AC operating voltage	Uc	275 Vac
Temporary Over Voltage (TOV) Characteristics - 5 sec. *Without disconnection*	UT	335 Vac withstand
Temporary Over Voltage (TOV) Characteristics - 120 mn *Without disconnection or with safety disconnection*	UT	440 Vac withstand
Residual Current *Leakage current to Ground*	Ipe	None
Follow current	If	None
Nominal discharge current *15 x 8/20 µs impulses*	In	20 kA
Max. discharge current *max. withstand @ 8/20 µs by pole*	Imax	50 kA
Impulse current by pole *max. withstand 10/350µs by pole*	Iimp	8 kA
Total lightning current *max. total withstand @ 10/350µs*	Itotal	24 kA
Withstand on Combination waveform IEC 61643-11 *Class III test: 1.2/50µs - 8/20µs*	Uoc	6 kV
Specific energy by pole *max. withstand 10/350 µs*	W/R	16 kJ/ohm
Protection mode(s)		L/PE
Protection level L/PE *@ In (8/20µs)*	Up L/PE	1.5 kV
Residual voltage L/PE at 5 kA *@ 5 kA (8/20µs)*	Up-5kA	0.9 kV
Admissible short-circuit current	Isccr	50 000 A
Mechanical Characteristics		
Technology		VG Technology (MOV+GSG)
SPD configuration		3-phase
Connection to Network		By 40mm busbar and wire for PE: 6-35mm² (50mm²)
Format		Plug-in modular box
Mounting		40 mm busbar systems
Housing material		Thermoplastic UL94 V-0
Operating temperature	Tu	-40/+85°C
Protection rating		IP20
Failsafe mode		Disconnection from AC network
Disconnection indicator		1 mechanical indicator by pole
Spare module(s)		MDAC1-8VG-275
Remote signaling of disconnection		none
Dimensions		See diagram
Disconnectors		

ZPAC1-8VG-30-275

Thermal disconnector		Internal
Installation ground fault breaker		Type 'S' or delayed
Back-up protection device		max. 315 A (gL/gG)
Standards		
Standards compliance		IEC 61643-11 / EN 61643-11 / UL1449 5ed.
Certification		KEMA
Part number		
64214		