# *Type 1+2+3 AC surge protector - 3-phase*

# ZPAC1-13VG-30-275



- Type 1+2+3 combined SPD based on a gas-filled spark gap
- 10-year guarantee
- Discharge capacity per pole: Iimp= 12.5 kA (10/350 µs)
- Safe disconnecting device
- Operating and leakage current-free
- Can be used for lightning protection classes III + IV
- Cost-effective maintenance thanks to individual plug-in modules
- Complies with the IEC 61643-11 and EN 61643-11 standards
- Complies with VDE-AR-N 4100 “Use of surge protective devices (SPD) type 1 in main power supply systems”

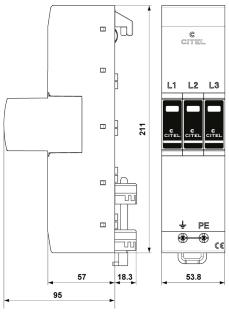


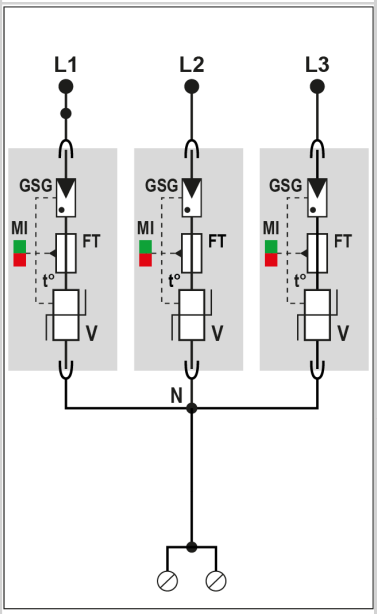


| Electrical Characteristics | | |
|---|---|---|
| SPD type | IEC | 1+2+3 |
| Network | | 230/400V |
| AC system | | TNC |
| Nominal line voltage | Un | 230/400 Vac |
| Max. AC operating voltage | Uc | 275 Vac |
| Temporary Over Voltage (TOV) Characteristics - 5 sec.<br>*Without disconnection* | UT | 335 Vac withstand |
| Temporary Over Voltage (TOV) Characteristics - 120 mn<br>*Without disconnection or with safety disconnection* | UT | 440 Vac withstand |
| Residual Current<br>*Leakage current to Ground* | Ipe | None |
| Follow current | If | None |
| Nominal discharge current<br>*15 x 8/20 µs impulses* | In | 20 kA |
| Max. discharge current<br>*max. withstand @ 8/20 µs by pole* | Imax | 50 kA |
| Impulse current by pole<br>*max. withstand 10/350µs by pole* | Iimp | 12.5 kA |
| Total lightning current<br>*max. total withstand @ 10/350µs* | Itotal | 37.5 kA |
| Withstand on Combination waveform IEC 61643-11<br>*Class III test: 1.2/50µs - 8/20µs* | Uoc | 6 kV |
| Specific energy by pole<br>*max. withstand 10/350 µs* | W/R | 40 kJ/ohm |
| Protection mode(s) | | L/PE |
| Protection level L/PE<br>*@ In (8/20µs)* | Up L/PE | 1.5 kV |
| Residual voltage L/PE at 5 kA<br>*@ 5 kA (8/20µs)* | Up-5kA | 0.9 kV |
| Admissible short-circuit current | Isccr | 50 000 A |
| **Mechanical Characteristics** | | |
| Technology | | VG Technology (MOV+GSG) |
| SPD configuration | | 3-phase |
| Connection to Network | | By 40mm busbar and wire for PE: 6-35mm² (50mm²) |
| Format | | Plug-in modular box |
| Mounting | | 40 mm busbar systems |
| Housing material | | Thermoplastic UL94 V-0 |
| Operating temperature | Tu | -40/+85°C |
| Protection rating | | IP20 |
| Failsafe mode | | Disconnection from AC network |
| Disconnection indicator | | 1 mechanical indicator by pole |
| Spare module(s) | | MDAC1-13VG-275 |
| Remote signaling of disconnection | | none |
| Dimensions | | See diagram |
| **Disconnectors** | | |

# ZPAC1-13VG-30-275

| | | |
|---|---|---|
| Thermal disconnector | | Internal |
| Installation ground fault breaker | | Type 'S' or delayed |
| Back-up protection device | | max. 315 A (gL/gG) |
| **Standards** | | |
| Standards compliance | | IEC 61643-11 / EN 61643-11 / UL1449 5ed. |
| Certification | | KEMA |
| **Part number** | | |
| **64215** | | |