*1-Pole 48 Vdc surge protector*

# DS72RS-48DC



- 2-poles surge protector 48 Vdc
- Type 1 et Type 2
- In 30 kA / Imax 70 kA
- Remote signaling
- Iimp 7 kA
- Pluggable Module
- IEC 61643-11 and EN61643-11 compliance
- UL1449 ed.5

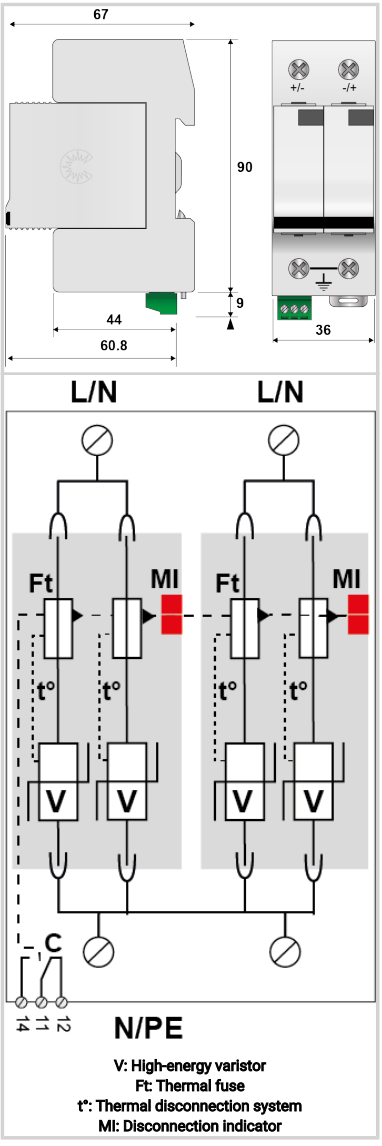


| Electrical Characteristics | | |
|---|---|---|
| SPD type | IEC | 1+2 |
| Network | | 48 Vdc |
| Nominal line voltage | Un | 48 Vdc |
| Nominal DC voltage | Un-dc | 48 Vdc |
| Max. DC operating voltage | Uc | 65 Vdc |
| Follow current | If | None |
| Nominal discharge current<br>*15 x 8/20 µs impulses* | In | 30 kA |
| Max. discharge current<br>*max. withstand @ 8/20 µs by pole* | Imax | 70 kA |
| Total Maximum discharge current<br>*max. total withstand @ 8/20 µs* | Imax Total | 140 kA |
| Impulse current by pole<br>*max. withstand 10/350µs by pole* | Iimp | 7 kA |
| Total lightning current<br>*max. total withstand @ 10/350µs* | Itotal | 14 kA |
| Connection mode(s) | | +/PE and -/PE |
| Protection mode(s) | | Differential/Common mode |
| Protection level +/PE (-/PE)<br>*@ In (8/20µs)* | Up | 300 V |
| **Mechanical Characteristics** | | |
| Technology | | MOV |
| SPD configuration | | 2-poles |
| Connection to Network | | By screw terminals: 4-25mm² |
| Format | | Plug-in modular box |
| Mounting | | Symmetrical rail 35 mm (EN 60715) |
| Housing material | | Thermoplastic UL94 V-0 |
| Operating temperature | Tu | -40/+85°C |
| Protection rating | | IP20 |
| Failsafe mode | | Disconnection from DC network |
| Disconnection indicator | | 1 mechanical indicator by pole |
| Spare module(s) | | DSM70R-48DC |
| Remote signaling of disconnection | | Output on changeover contact |
| Dimensions | | See diagram |
| **Disconnectors** | | |
| Thermal disconnector | | Internal |
| Back-up protection device | | 100 A min. - 125 A max. - Fuses type gG |
| **Standards** | | |
| Standards compliance | | IEC 61643-11 / EN 61643-11 / UL1449 ed.5 |
| Certification | | cRUus |
| Environmental standards | | EU RoHS |
| **Part number** | | |
| **492121** | | |