Isolating spark gap (ISG)

BF P100 500/20

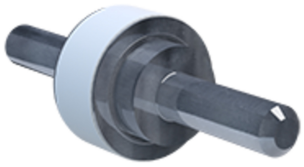

- Isolating spark gap
- Outdoor application
- Max. discharge current: 100 kA
- EN 62561-3 compliance

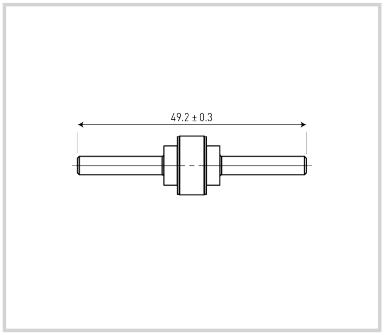

Electrical Characteristics		
Rated DC withstand voltage	Uw DC	400 V
Rated AC withstand voltage	Uw AC	280 V
Max. discharge current *max. withstand @ 8/20 µs by pole*	Imax	100 kA
Impulse current by pole *max. withstand 10/350µs by pole*	Iimp	50 kA
Classification following IEC 62561-3		N
Rated impulse sparkover voltage *1kV/µs*	Ur limp	1200 V
Mechanical Characteristics		
Technology		Gas discharge tube
Operating temperature	Tu	-40/+85°C
Operating and storage temperature		-40°C / +90°C
Protection rating		IP67
Number of units per package		20 units per cardboard
Dimensions		Ø 16mm
Standards		
Standards compliance		EN 62561-3
RohS compliance		Yes
Part number		
90231322		