Type 1+2 AC surge protector - 1-pole

DS250E-48DC



- 2-poles surge protector 48 Vdc
- Type 1 and Type 2 application
- In 25 kA / Imax 70 kA
- Remote signaling
- Iimp 25 kA
- IEC 61643-11 and EN 61643-11 compliance

CE

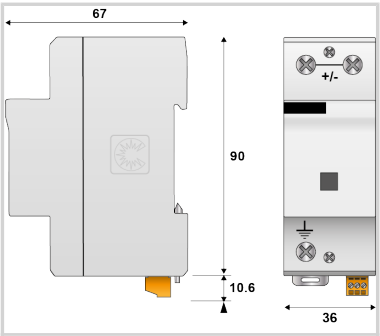

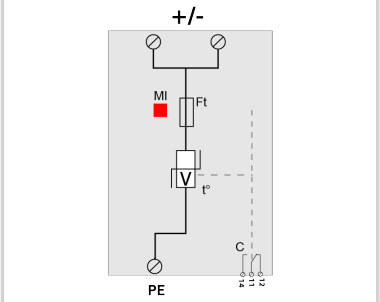

V: High-energy varistor
Ft: Thermal fuse
C: Remote signal contact
t°: Thermal disconnection system
MI: Disconnection indicator

Electrical Characteristics		
SPD type	IEC	1+2
Network		48 Vdc
Nominal line voltage	Un	48 Vdc
Nominal DC voltage	Un-dc	48 Vdc
Max. DC operating voltage	Uc	75 Vdc
Residual Current *Leakage current to Ground*	Ipe	< 0.2 mA
Follow current	If	None
Nominal discharge current *15 x 8/20 µs impulses*	In	25 kA
Max. discharge current *max. withstand @ 8/20 µs by pole*	Imax	70 kA
Total Maximum discharge current *max. total withstand @ 8/20 µs*	Imax Total	140 kA
Impulse current by pole *max. withstand 10/350µs by pole*	Iimp	25 kA
Specific energy by pole *max. withstand 10/350 µs*	W/R	156 kJ/ohm
Connection mode(s)		+/PE or -/PE
Protection mode(s)		Common mode
Protection level +/PE (-/PE) *@ In (8/20µs)*	Up	500 V
Mechanical Characteristics		
Technology		MOV
SPD configuration		Single phase
Connection to Network		By screw terminals: 6-35mm² / by bus
Format		1-pole modular box
Mounting		Symmetrical rail 35 mm (EN 60715)
Housing material		Thermoplastic UL94 V-0
Operating temperature	Tu	-40/+85°C
Protection rating		IP20
Failsafe mode		Disconnection from DC network
Disconnection indicator		3 mechanical indicators
Remote signaling of disconnection		Output on changeover contact
Wiring for remote signaling		1.5 mm² max.
Max. Voltage/Current for remote signaling		250 V / 0.5 A (AC) / 30 V / 3 A (DC)
Dimensions		See diagram
Disconnectors		
Thermal disconnector		Internal
Back-up protection device		Fuses type gG - 315 A
Standards		
Standards compliance		IEC 61643-11 / EN 61643-11 / UL1449 ed.5
Certification		
Part number		
63909		