Ultra Compact Type 2+3 hard wired surge protector

MSB6-24/LD



- Compact type 2+3 surge protector
- Wall mounting and hard wired connection
- Status indicators
- IP20
- EN 61643-11, IEC 61643-11 and UL1449 ed.5 compliance

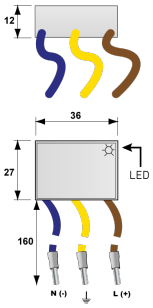

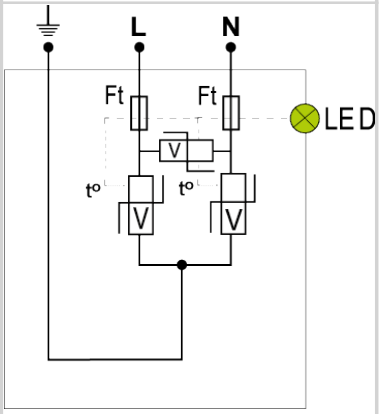

V: Varistor
Ft: Thermal fuse
t°: Thermal disconnection system
LED: Disconnection indicator

Electrical Characteristics		
SPD type	IEC	2+3
Network		24V supply
Nominal line voltage	Un	24 V
Max. AC operating voltage	Uc	30 Vac
Max. DC operating voltage	Uc	38 Vdc
Follow current	If	None
Nominal discharge current *15 x 8/20 µs impulses*	In	0.5 kA
Max. discharge current *max. withstand @ 8/20 µs by pole*	Imax	2 kA
Withstand on Combination waveform IEC 61643-11 *Class III test: 1.2/50µs - 8/20µs*	Uoc	1 kV
Protection mode(s)		Common/Differential mode
Protection level *@ In (8/20µs) and (1,2/50µs)*	UP L/N	0,18 kV
Protection level *@ In (8/20µs) and (1,2/50µs)*	UP L/PE	0,18 kV
Mechanical Characteristics		
Technology		MOV
Connection to Network		Connecting wire, 1.5 mm²
Mounting		AC outlet or screw terminal
Housing material		Thermoplastic UL94 V-0
Operating temperature	Tu	-40/+85°C
Protection rating		IP20
Failsafe mode		Disconnection from AC network
Disconnection indicator		Green LED OFF
Operating indicator		Green Led ON
Dimensions		See diagram
Disconnectors		
Thermal disconnector		Internal
Standards		
Standards compliance		IEC 61643-11 / EN 61643-11 / UL1449 ed.5
Certification		
Part number		
561313		