*Compact Type 2+3 hard wired surge protector*

# MSB10-400 DE



- Compact type 2 + 3 surge protector
- Wall mounting and hard wired connection
- Status indicators
- IP66
- EN 61643-11 and IEC 61643-11, UL1449 ed.5 compliance

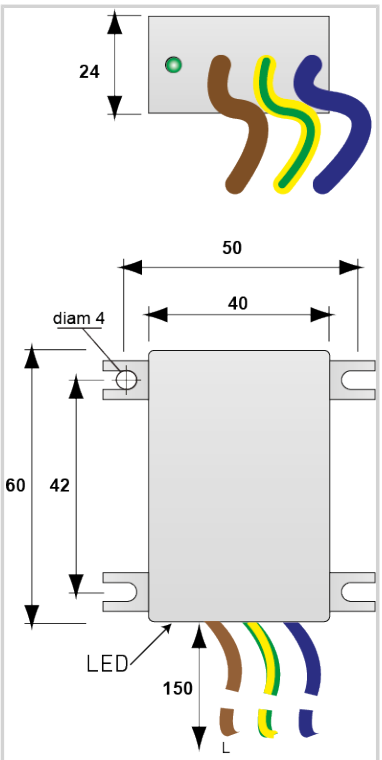


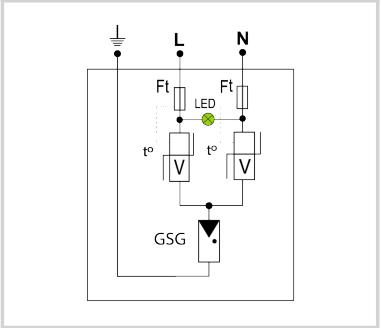


| Electrical Characteristics | | |
|---|---|---|
| SPD type | IEC | 2+3 |
| Network | | 230/400V |
| AC system | | TT-TN |
| Nominal line voltage | Un | 230 V |
| Max. AC operating voltage | Uc | 277 Vac |
| Temporary Over Voltage (TOV) Characteristics - 5 sec. *Without disconnection* | UT | 335 Vac withstand |
| Temporary Over Voltage (TOV) Characteristics - 120 mn *Without disconnection or with safety disconnection* | UT | 440 Vac disconnection |
| Follow current | If | None |
| Nominal discharge current *15 x 8/20 µs impulses* | In | 5 kA |
| Max. discharge current *max. withstand @ 8/20 µs by pole* | Imax | 10 kA |
| Withstand on Combination waveform IEC 61643-11 *Class III test: 1.2/50µs - 8/20µs* | Uoc | 10 kV |
| Withstand on overvoltages IEEE C62.41.1 | | 10 kV / 10 kA |
| Protection mode(s) | | Common/Differential mode |
| Protection level *@ In (8/20µs)* | Up | 1.5 kV |
| Protection level L/N *@ In (8/20µs)* | Up L/N | 1.5 kV |
| Protection level L/PE *@ In (8/20µs)* | Up L/PE | 1.5 kV |
| Protection level CM/DM *@ In (8/20µs)* | Up mc /md | 1.5 kV / 1.5 kV |
| Admissible short-circuit current | Isccr | 10 000 A |
| **Mechanical Characteristics** | | |
| Technology | | MOV+GDT |
| Connection to Network | | Connecting wire, 2 mm² |
| Mounting | | Wall or plate |
| Housing material | | Thermoplastic UL94 V-0 |
| Operating temperature | Tu | -40/+85°C |
| Protection rating | | IP65 |
| Failsafe mode | | Disconnection and AC line cut-off |
| Disconnection indicator | | Green LED OFF |
| Operating indicator | | Green Led ON |
| Dimensions | | See diagram |
| **Disconnectors** | | |
| Thermal disconnector | | Internal |
| Installation ground fault breaker | | Type 'S' or delayed |
| **Standards** | | |
| Standards compliance | | IEC 61643-11 / EN 61643-11 / UL1449 ed.5 |
| Certification | | UL Recognized |
| **Part number** | | |
| **56120120** | | |